RICE

LAT'02

Moscow
June 2002

OUTLINE

Trace gas concentration measurements using quantum cascade lasers

A. A. Kosterev and F. K. Tittel
Rice Quantum Institute, Rice University, Houston, TX 77251-1892

C. Gmachl and F. Capasso
Bell Laboratories, Lucent Technologies, 600 Mountain Avenue, Murray Hill, NJ 07974

- Distinguishing features of QC-DFB lasers
- Spectroscopic detection of trace gases with CW QCs
- Specific issues related to pulsed operation mode
- Latest results
- Future development

Spectral Coverage by Diode/QC Lasers

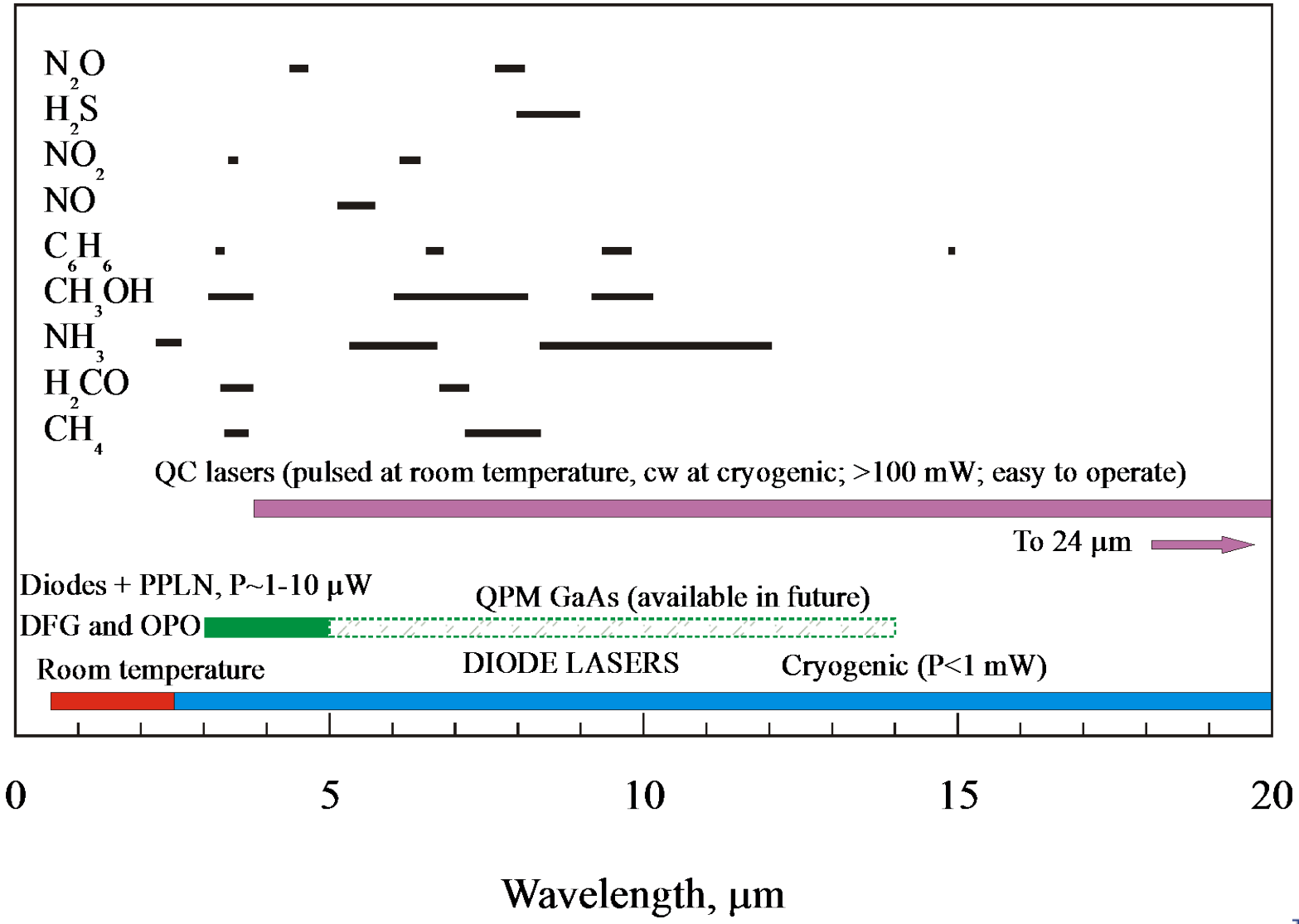

RICE

QC-DFB Compared to Diode Lasers

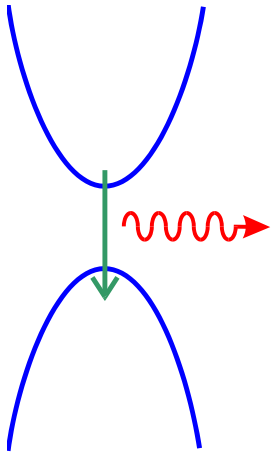

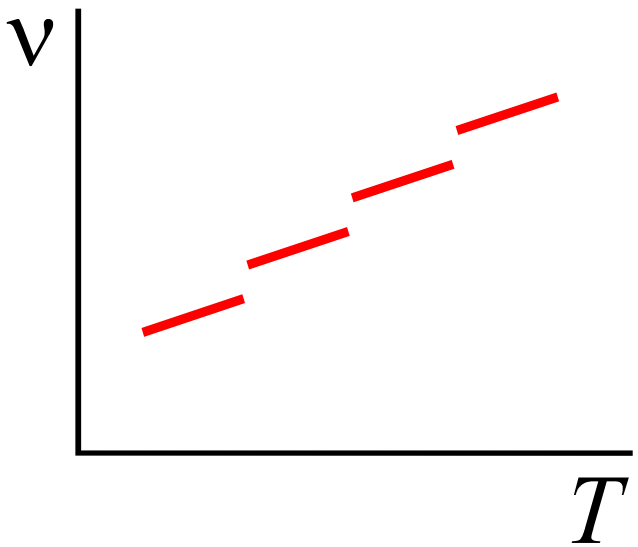

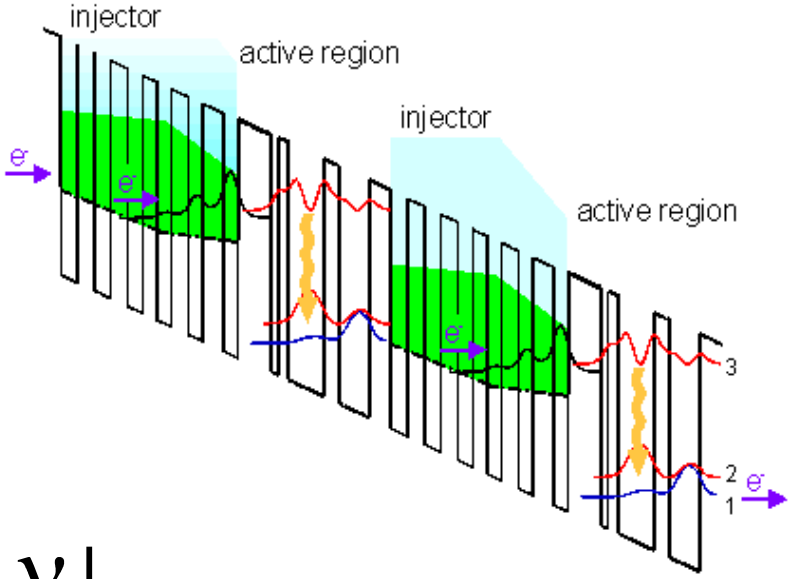

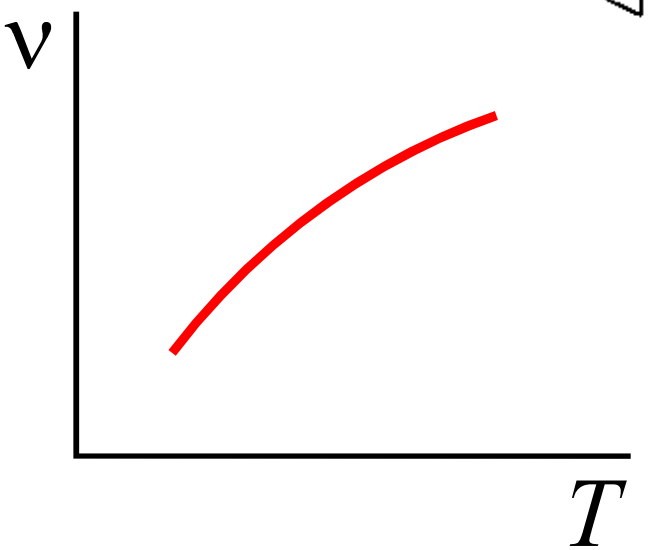

RICE

Distributed Feedback QC Laser-Schematic

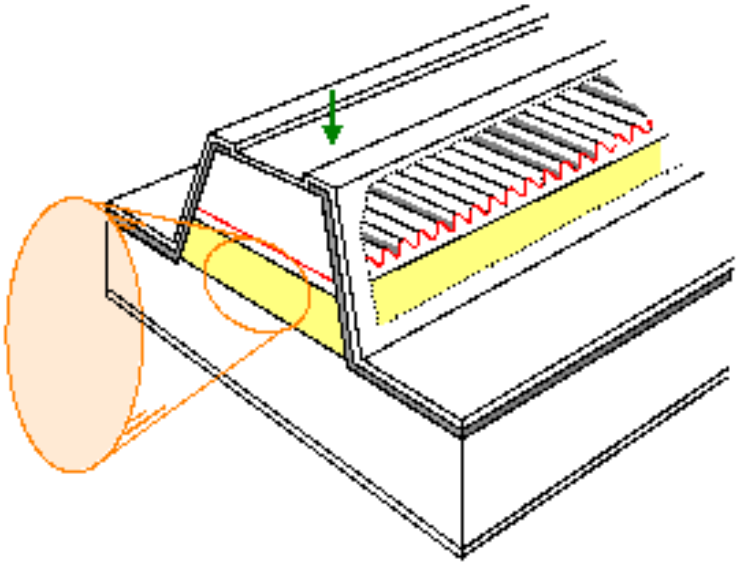

schematic

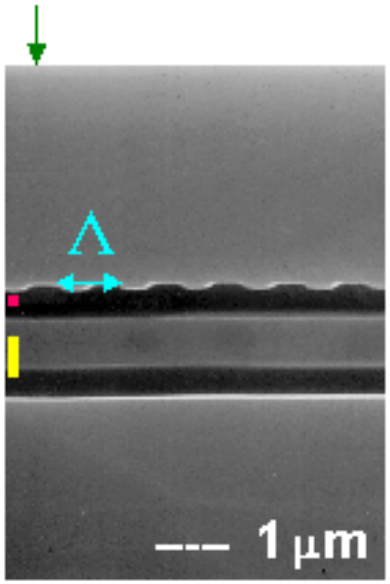

cross-section micrograph

- Grating selects well defined single wavelengths
- Tunable with temperature

Ultrasensitive absorption spectroscopy techniques

1.

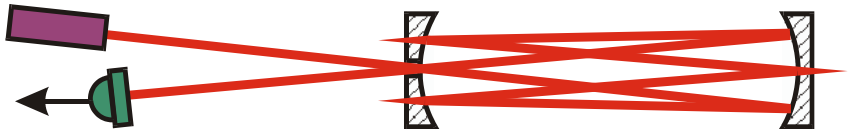

Multipass cell spectroscopy

2.

Integrated cavity output spectroscopy

3.

Cavity ringdown spectroscopy

RICE

Trace Gas Detection with a Multipass Cell

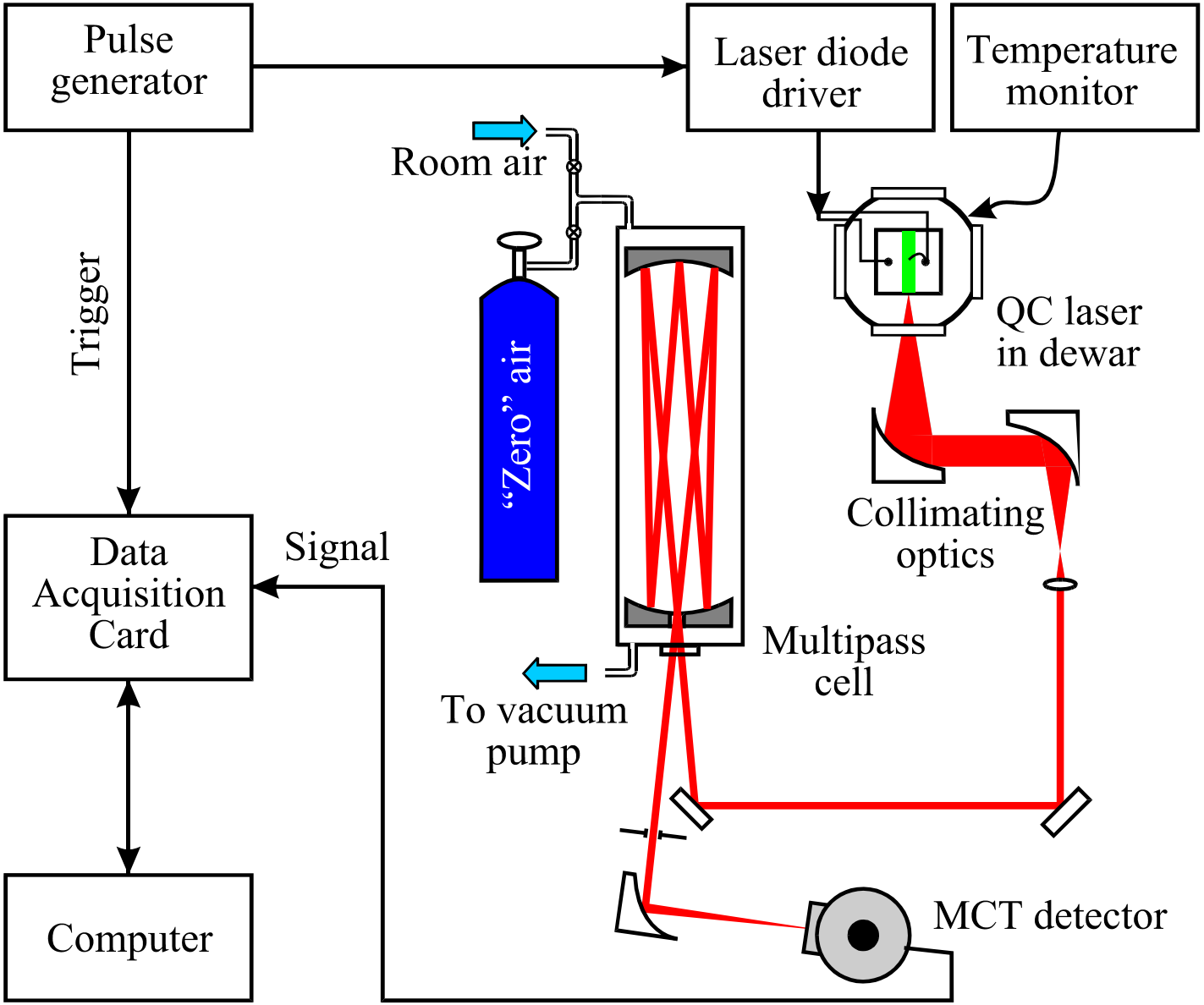

Absorption Spectrum of Room Air

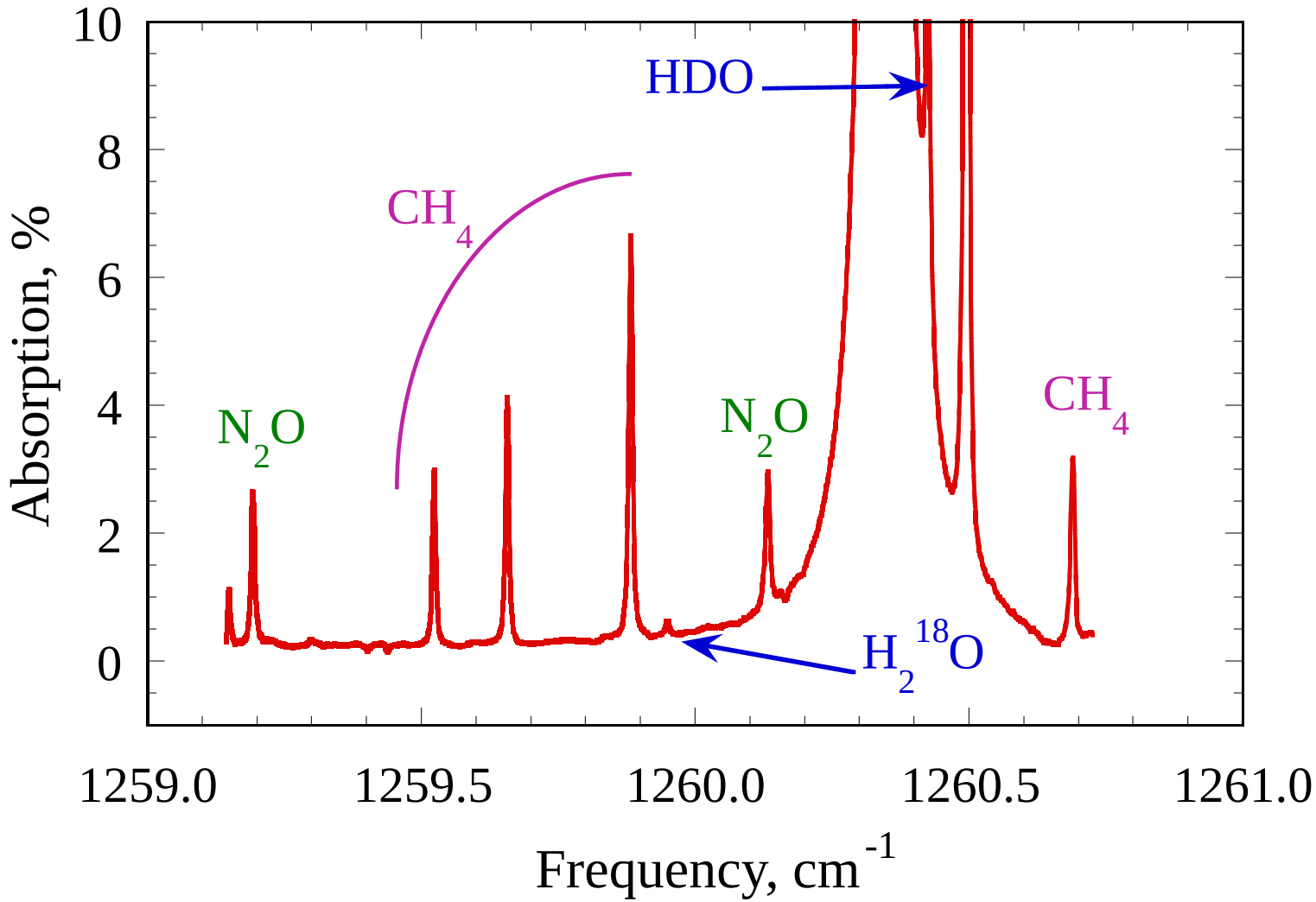

RICE

Cavity Ring-Down Spectroscopy

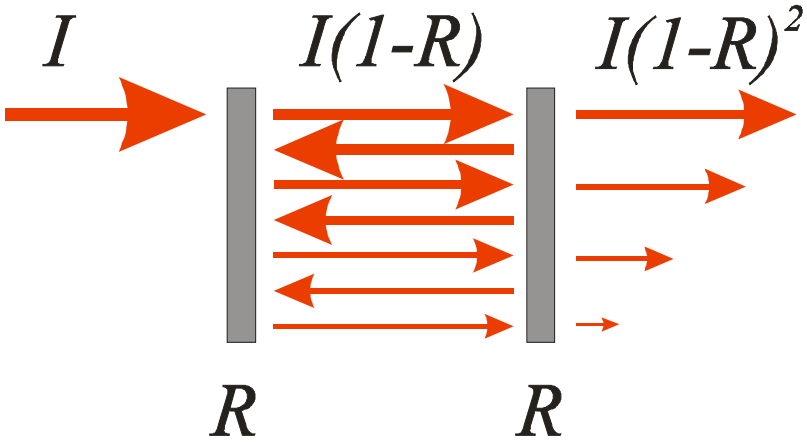

$R>0.999...$

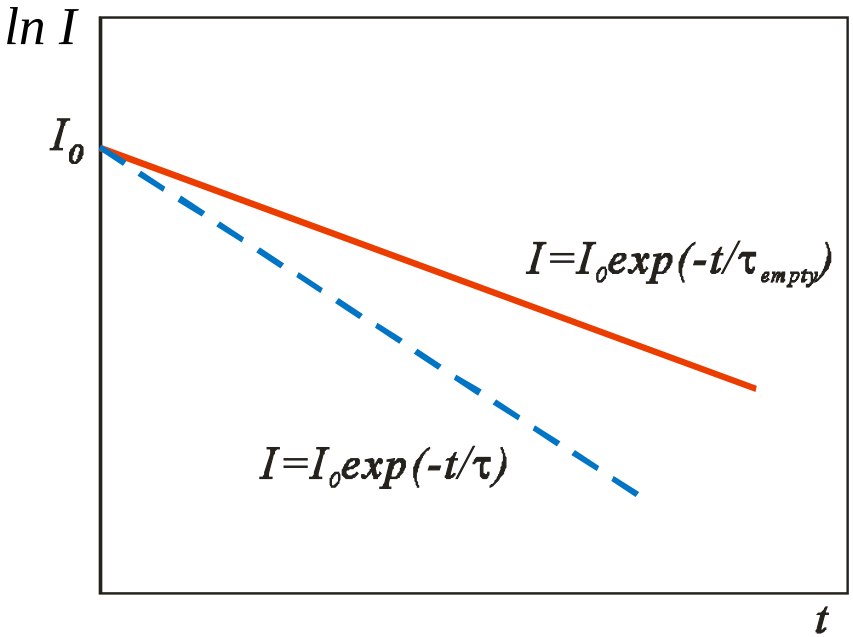

$$I = I_0 \exp\left(-\frac{t}{\tau}\right)$$

$$\tau = \frac{l}{c} \cdot \frac{1}{\alpha l - \ln\sqrt{R_1 R_2}}$$

$$\alpha = \frac{1}{c}\left(\frac{1}{\tau} - \frac{1}{\tau_{empty}}\right)$$

Optical Cavity Transmission

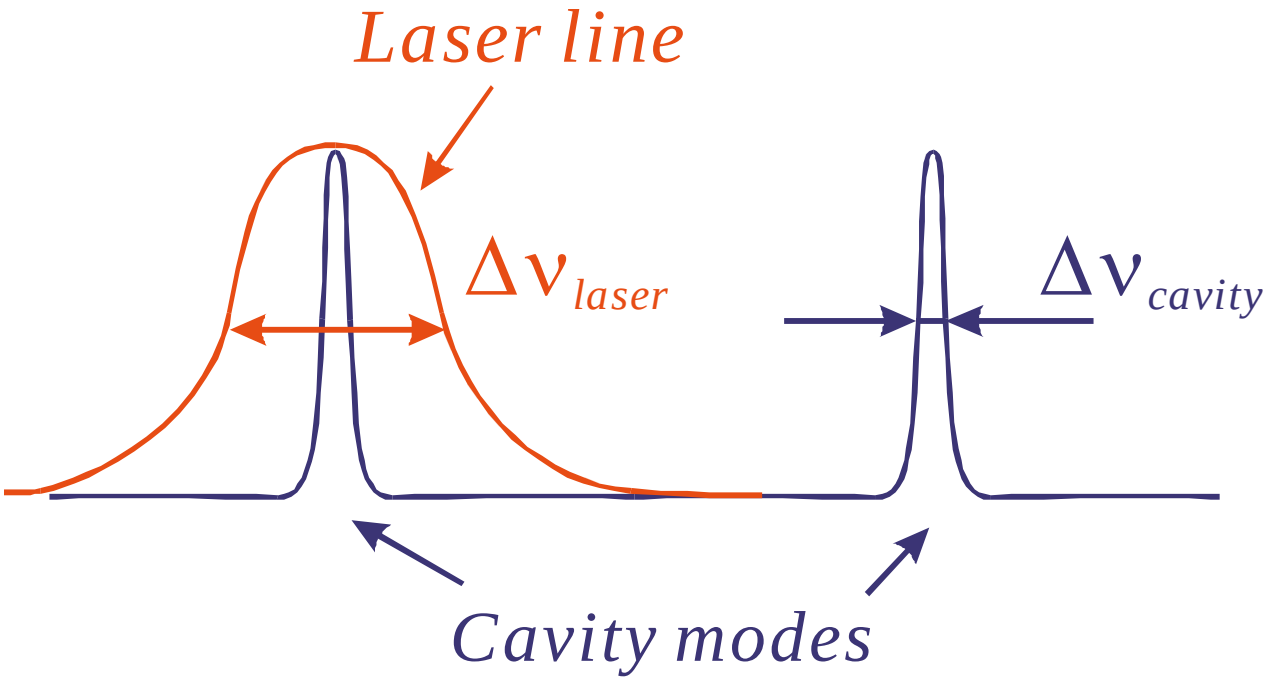

$$T \approx \frac{\Delta\nu_{cavity}}{\Delta\nu_{laser}} \qquad \Delta\nu_{cavity} = \frac{c(1-R)}{2\pi d} = \frac{1}{2\pi\tau}$$

$$\tau = 3.5\mu s \quad \Rightarrow \quad \Delta\nu_{cavity} = 45\,\text{kHz}$$

RICE

CRDS Gas Sensor

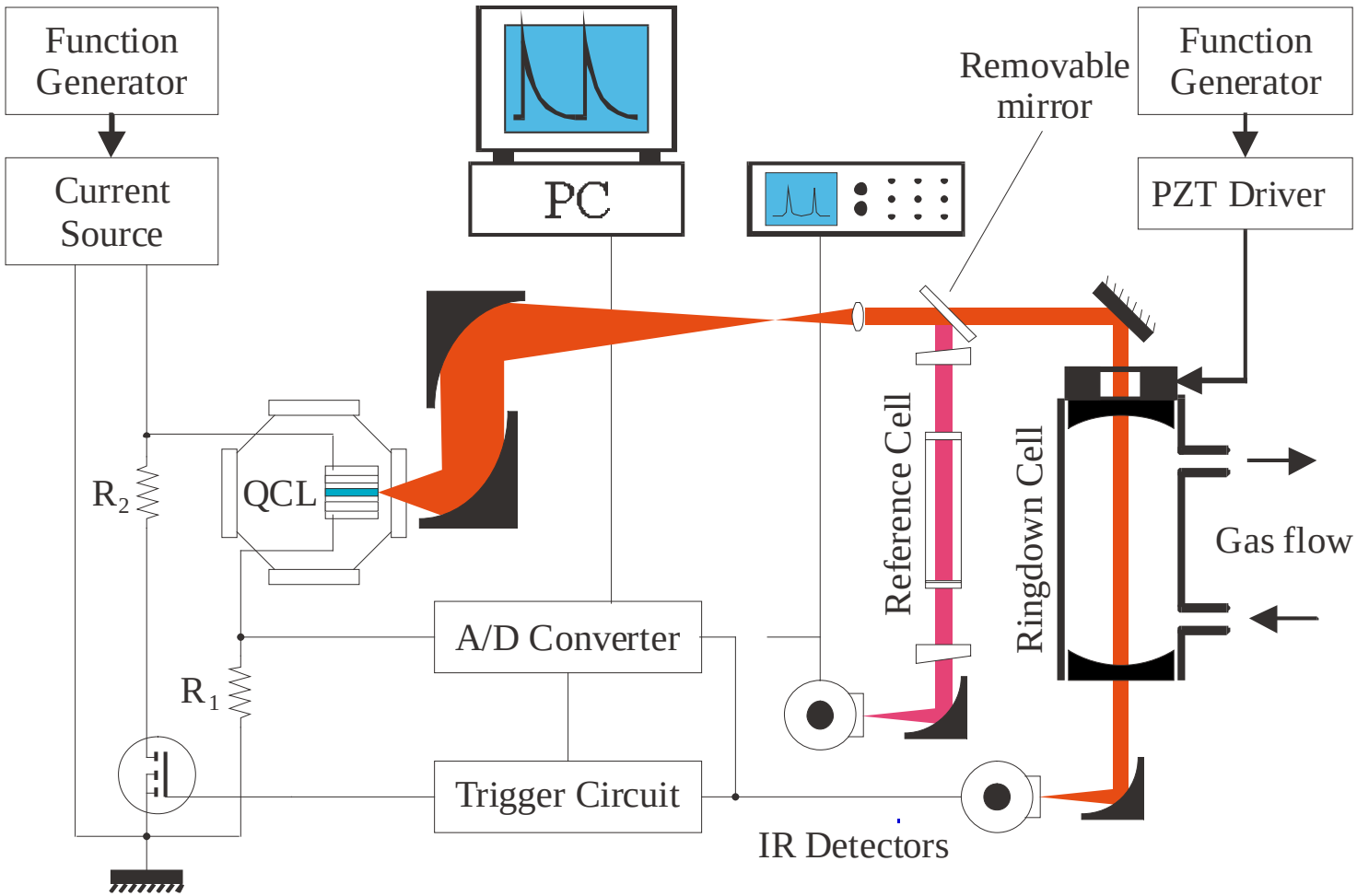

RICE

NO absorption, 60 Torr Total Pressure

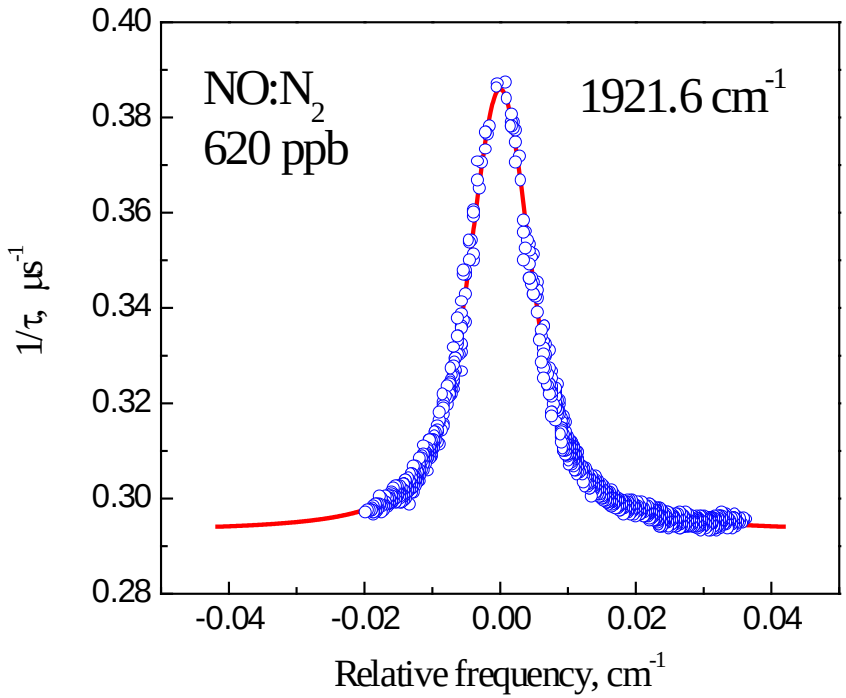

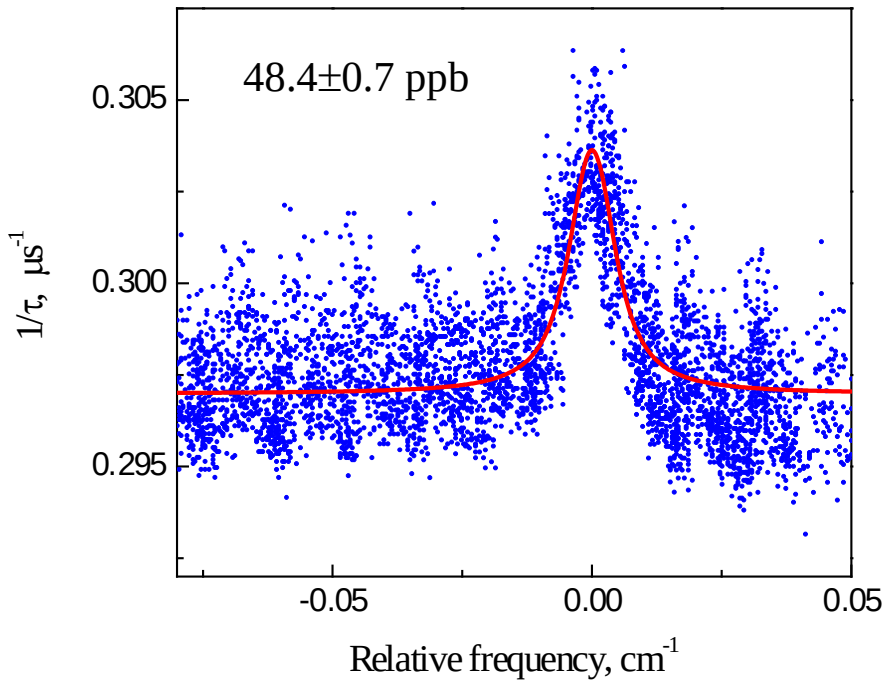

Pulsed Operation of a QC-DFB Laser

ADVANTAGES	DISADVANTAGES
♦ Laser can be operated at near-room temperature	♦ Broader linewidth (~300 MHz)
♦ Lower power consumption (facilitates temperature control)	♦ Reduced average power
♦ No consumables (liquid N_2)	♦ More sophisticated electronics for driving QC laser and data acquisition are required
♦ Compact	

RICE

Pulsed QC-DFB Laser Housing

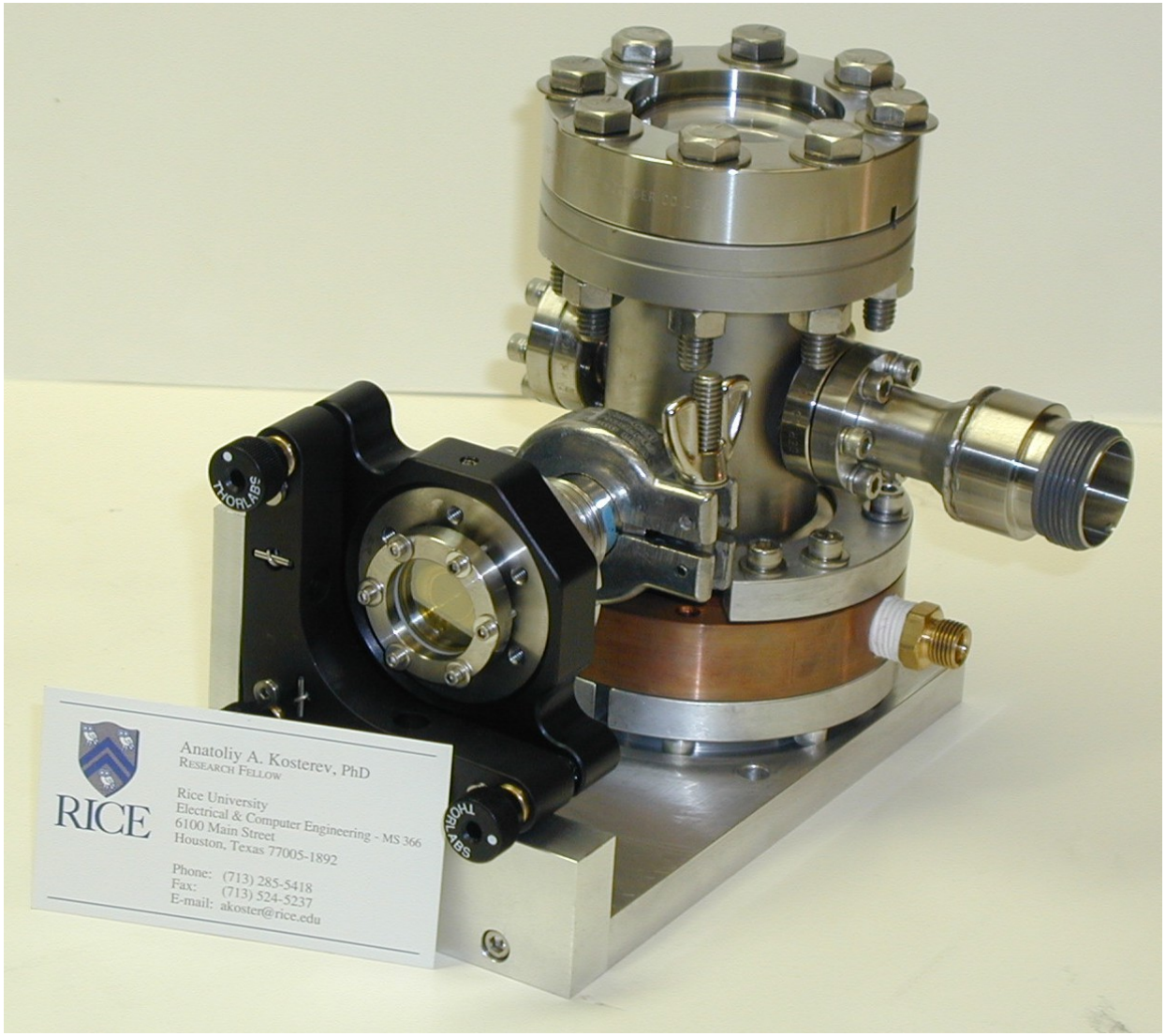

RICE

Absorption spectra of benzene, CO_2 and H_2O

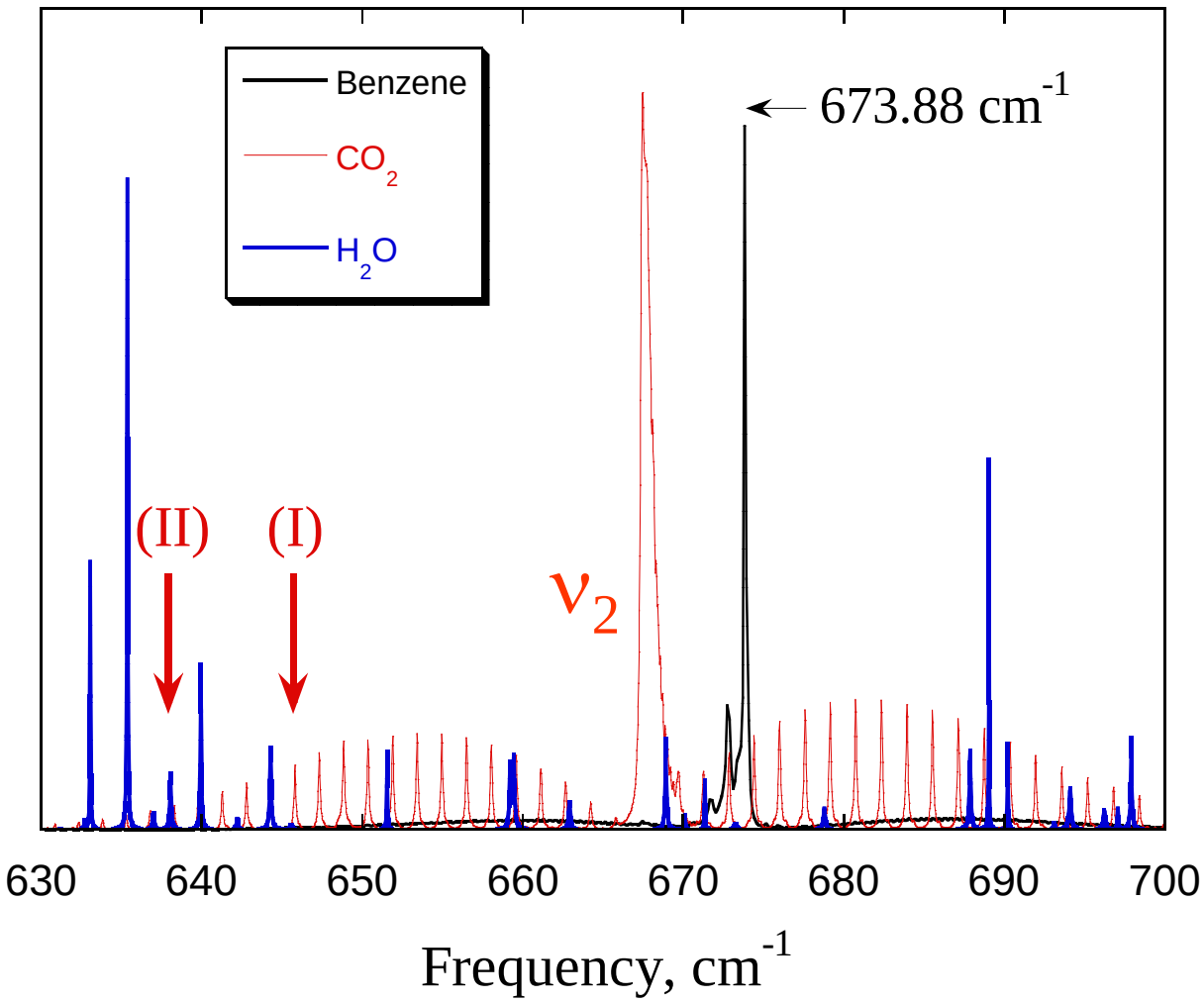

Experimental setup

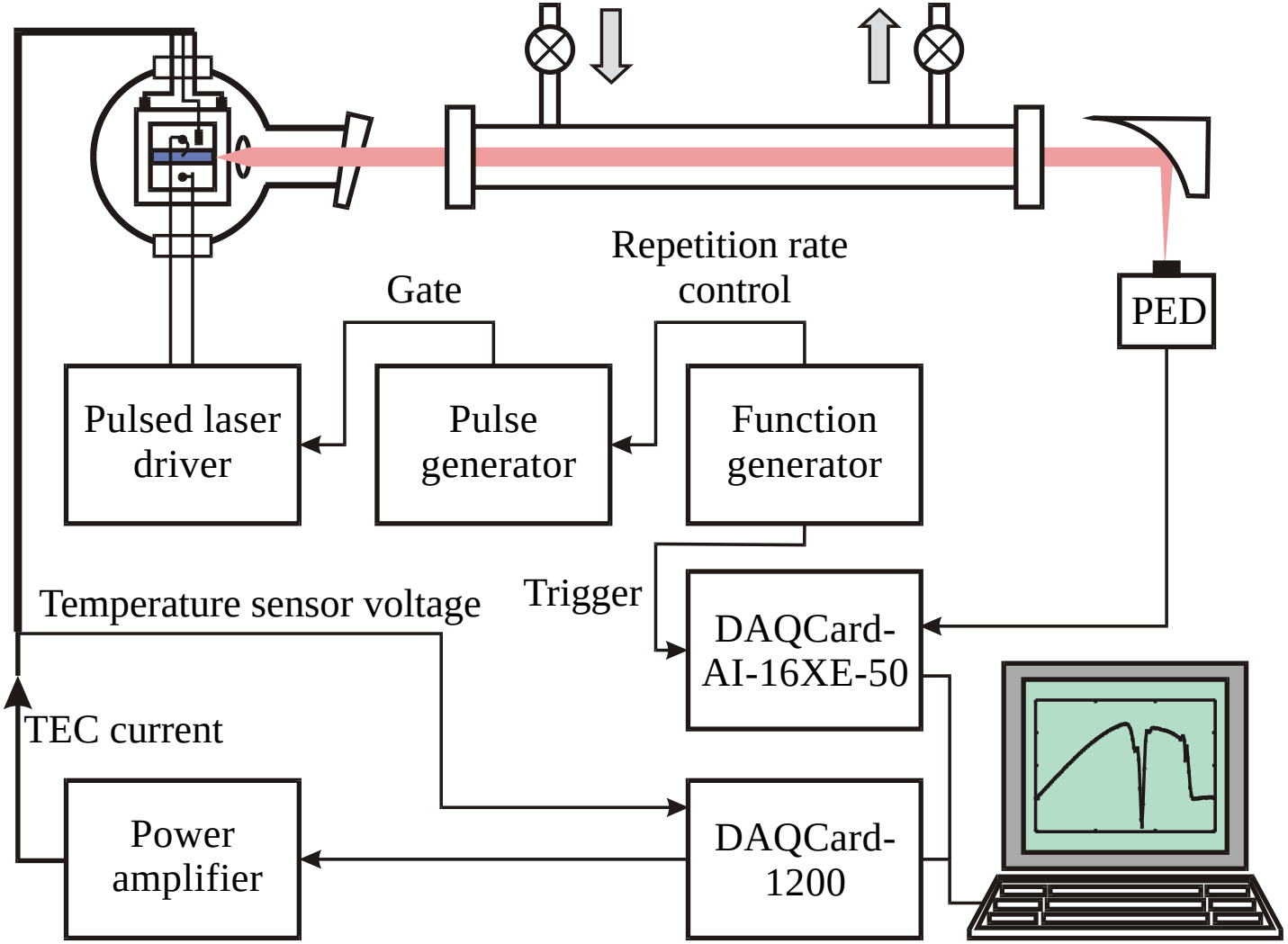

RICE

Pyroelectric detector and preamplifier

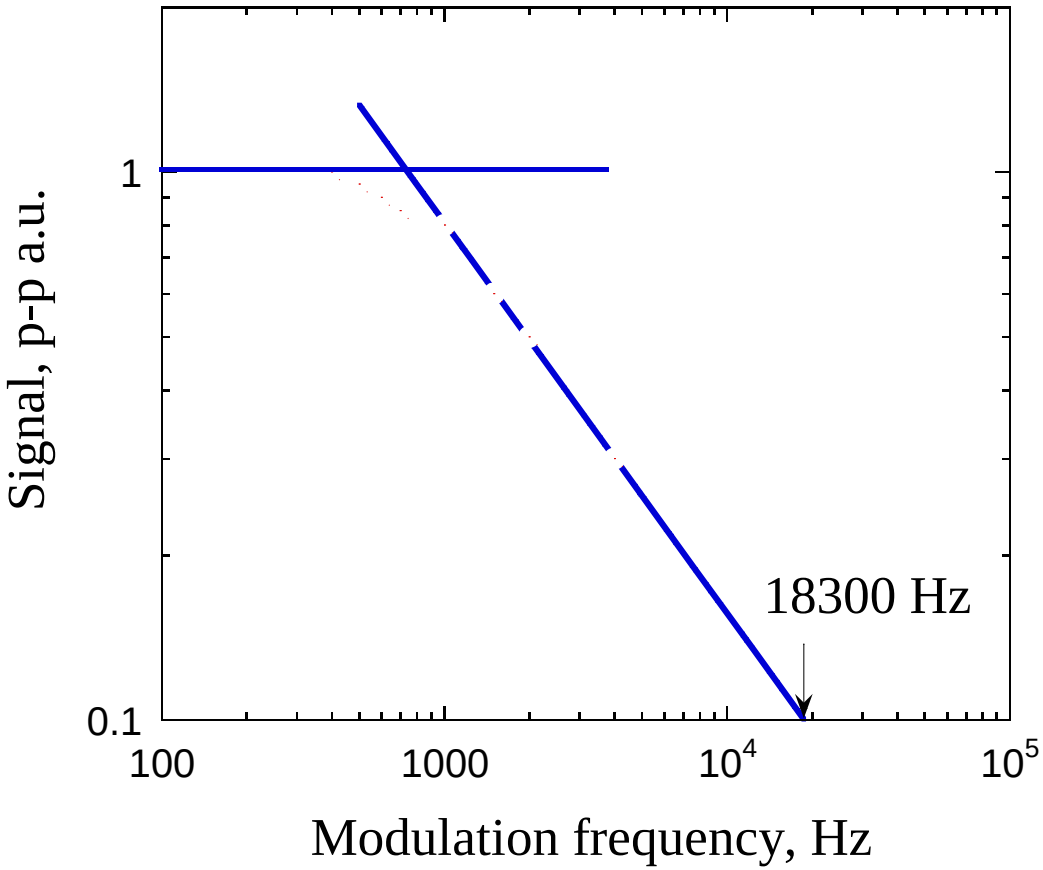

Band: 8 to 1150 Hz

Sensitivity: 3.84 V/mW

Pulsed QC Laser Wavelength Scanning

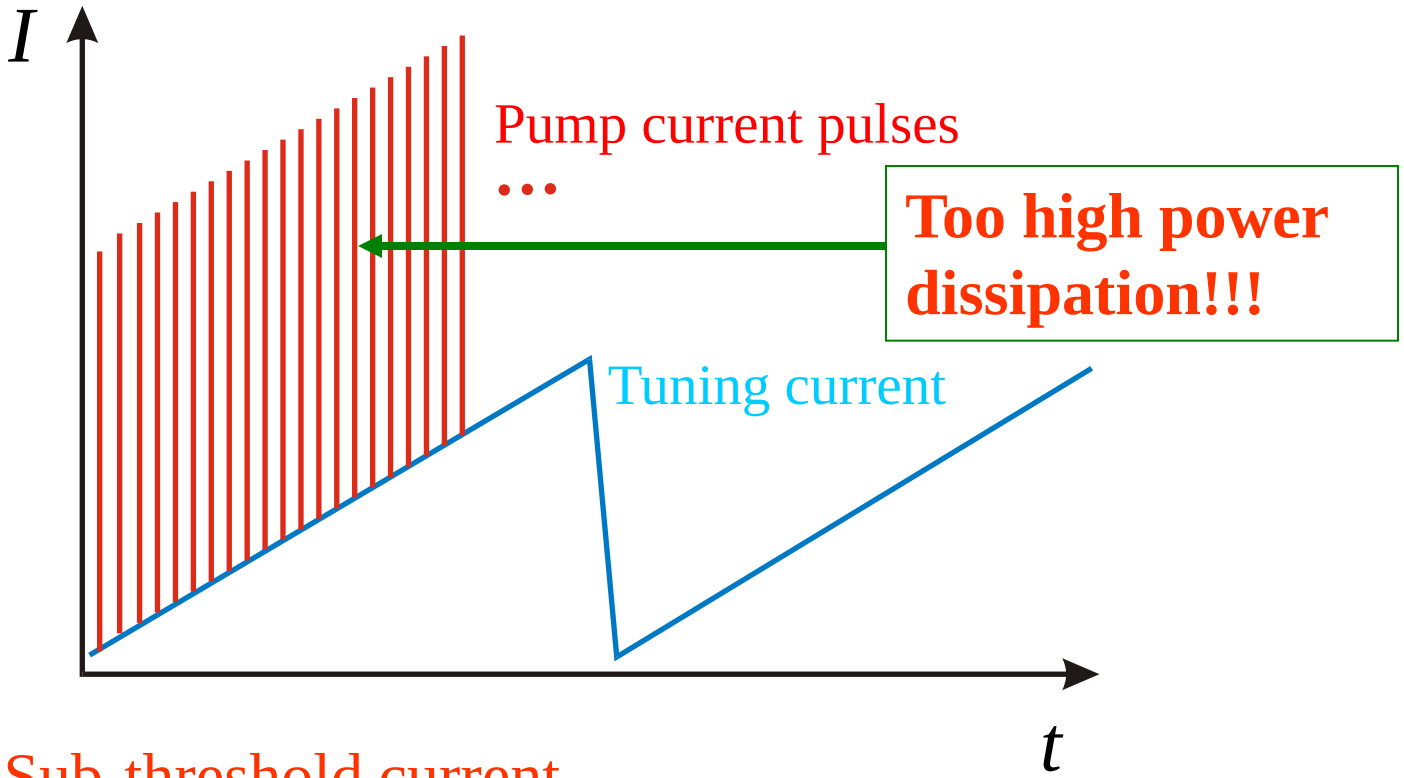

Solution: Sub-threshold current

K. Namjou, S. Cai, E.A. Whittaker, J. Faist, C. Gmachl, F. Capasso, D.L. Sivco, and A.Y. Cho, “Sensitive absorption spectroscopy with a room-temperature distributed-feedback quantum-cascade laser”, *Opt. Lett.* **23**, 219-221 (1998)

Fast wavelength scan calibration

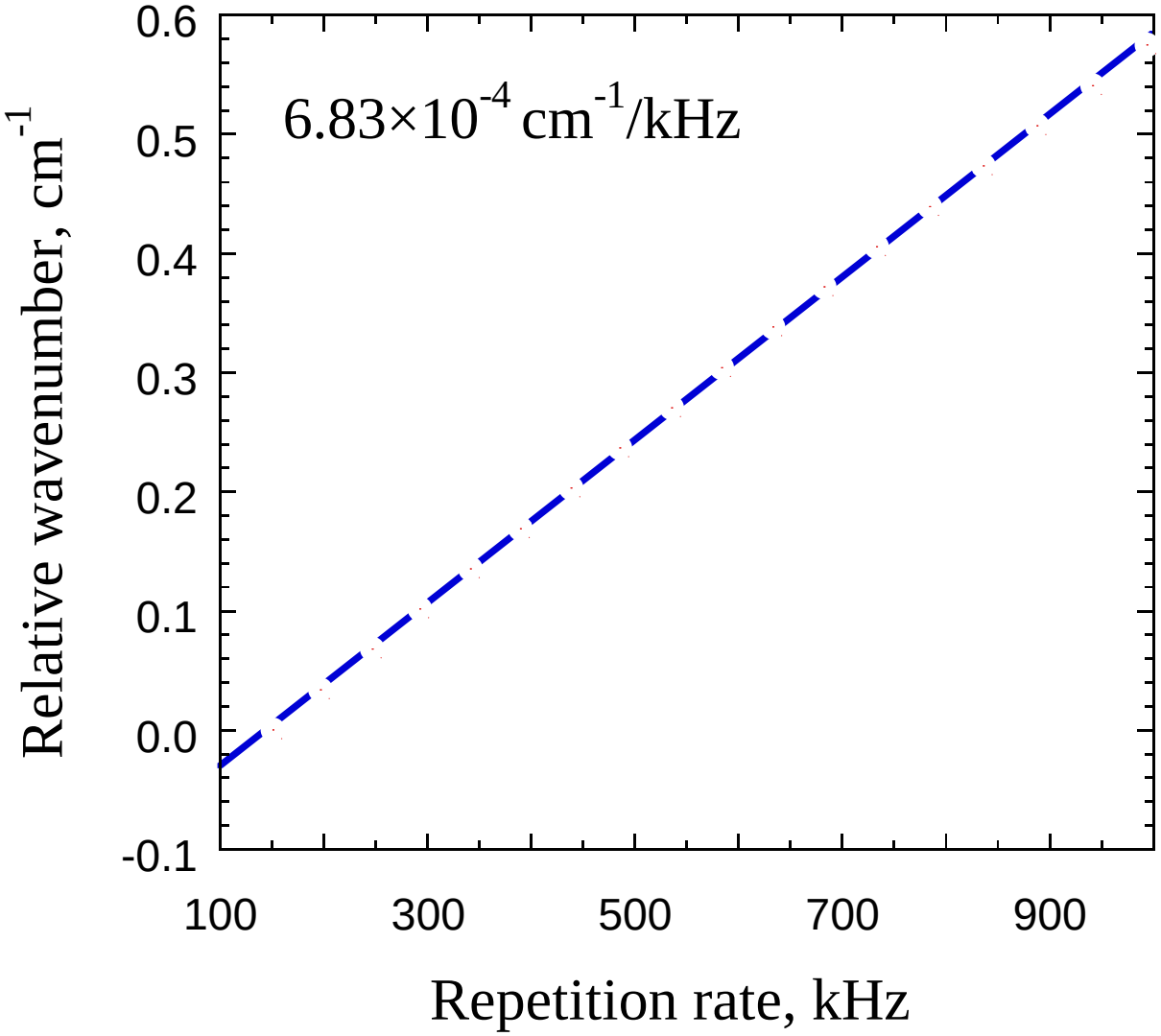

RICE

Ambient air absorption – 45 cm path

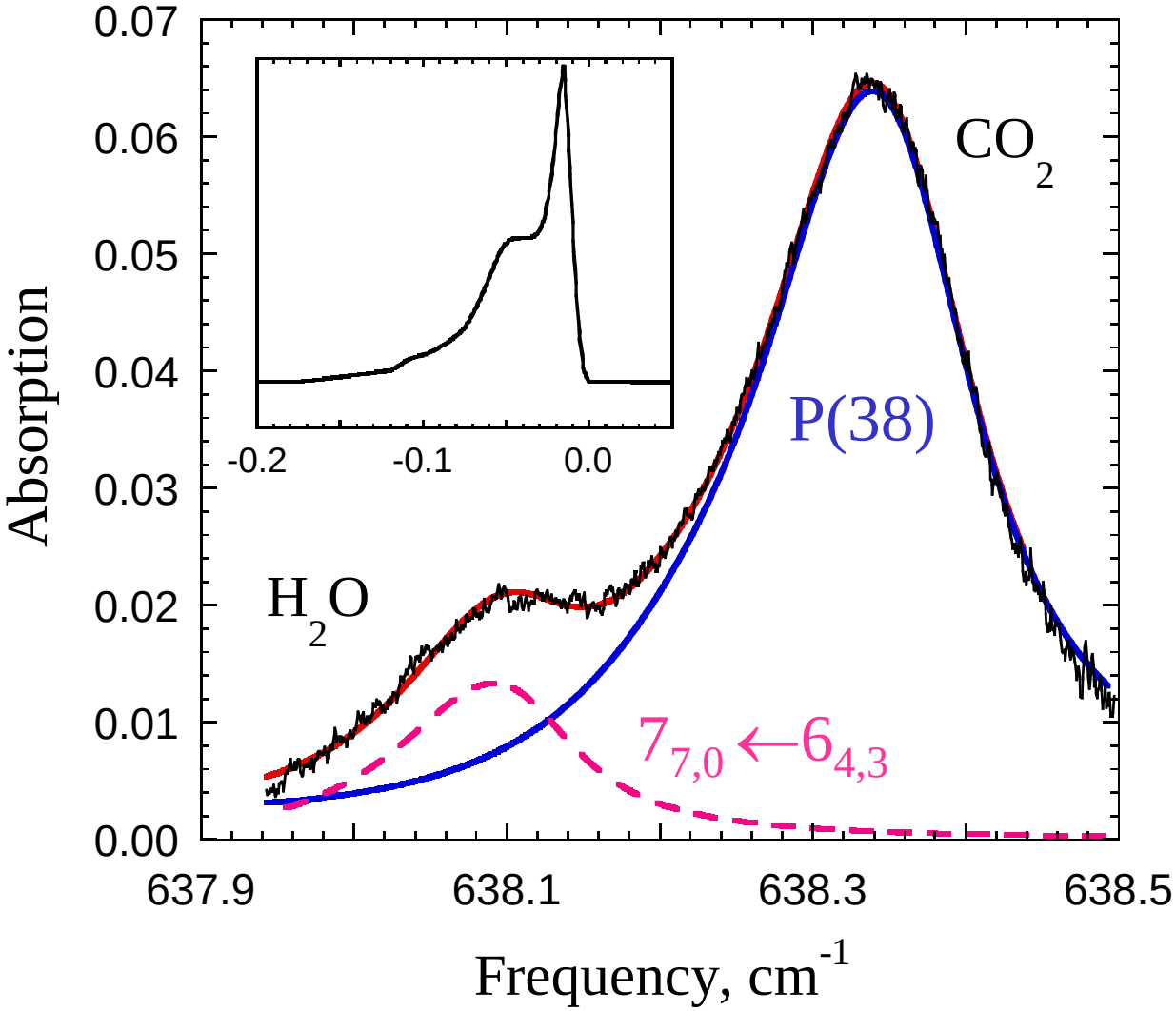

100 scans averaged

CO_2: 465 ppmv

H_2O: 5.1 Torr

(25% humidity - **???**)

RICE

Summary

- QC-DFB lasers are powerful, robust and reliable sources for mid-IR spectroscopic detection of trace species
- A variety of approaches including direct absorption, CRD, ICOS and PAS can be used for QC-DFB laser based spectroscopic detection of trace species
- So far, cryogenic-free operation of QC-DFB lasers requires pulsed operation mode, which result in a linewidth >200 MHz and low average power
- Fast wavelength scan of a pulsed QC-DFB laser can be performed either by adding a modulated subthreshold current or by the pulses repetition rate modulation

RICE