has revealed a preference for the 28.07° boundary. Calculations of the energy of coincidence twist boundaries between ionically bonded crystals are in progress and will be reported elsewhere.

Although the results in Fig. 3 show that three twist boundaries have lower energies than boundaries with slightly larger or smaller angles of twist the prevalence of a twist boundary is not a very good guide to its energy. This is evident if one considers the processes which lead to the formation of a coincidence boundary. When a pair of crystals meet it is most probable that a pair of edges touch, or that a corner of one crystal touches a point in the face of the other. Either of these events is followed by relative rotation of the crystals until an edge of one lies in a face of the other. The crystals then rotate about their line of contact until two {001} faces meet and join. Finally, if the Peierls stress is not too large, the crystals rotate about the normal to their contact plane to reduce the energy of the interface between them.[8] This rotation ceases when a minimum in the interfacial energy—deep enough to terminate the rotation—is reached. The fraction of joined crystals with a particular twist boundary between them will depend on the angle between the adjacent maxima. If the maxima are widely separated the boundary has a large catchment angle and will be common. If the maxima are close to one another the boundary will be rare.

The conclusions to be drawn from the results described in this paper are as follows:

(1) Twist boundaries are formed on {001} planes during the clustering of MgO smoke crystals.

(2) Twist boundaries at 16.5±0.3°, 22.6±0.3°, and 36.6±0.3° have lower energies than boundaries with slightly smaller or larger angles of twist.

(3) The angles at which low-energy boundaries occur are predicted by the coincidence model.

The authors are grateful to Dr. S. Mader for useful discussions.

[1]J. H. van der Merwe, Proc. Phys. Soc. (London) A63, 616 (1950).

[2]F. R. N. Nabarro, *Theory of Crystal Dislocations* (Clarendon Press Oxford, England, 1967), p. 137.

[3]H. Wilman, Proc. Phys. Soc. (London) A64, 329 (1951).

[4]M. L. Kronberg and F. H. Wilson, Trans. AIME 185, 501 (1949); S. Ranganathan, Acta Cryst. 21, 197 (1966).

[5]T. Schober and R. W. Balluffi, Phil. Mag. 21, 109 (1970).

[6]R. D. Heidenreich, Phys. Rev. 62, 291 (1942).

[7]Although we have emphasized the presence of three observed angles of twist and their relationship to the coincidence model, it is to be noted that other twist angles at which boundaries were observed (Fig. 3) also correspond to angles predicted by the coincidence model. Coincidence boundaries are predicted at 8.17°, 8.80°, 11.44°, 12.68°, and 18.98°. The densities of coincidence sites in these boundaries are $\frac{1}{157}$, $\frac{1}{85}$, $\frac{1}{101}$, $\frac{1}{41}$, and $\frac{1}{37}$.

[8]P. G. Shewmon, *Recrystallization, Grain Growth, and Textures* (ASM, Metals Park, Ohio, 1966), p. 165.

MEASUREMENTS OF PHOTON CORRELATIONS OF SECOND HARMONIC GENERATED LIGHT*

F. Davidson,† J. Klebba, C. Laurence, and F. Tittel

Electrical Engineering Department, Rice University, Houston, Texas 77001

(Received 22 May 1970)

Results of measurements of the second-order intensity correlation function of the optical field produced by cw optical second harmonic generation in a $LiNbO_3$ crystal pumped by a He-Ne laser operating in two independent axial modes are reported. The observed correlation function is shown to be in agreement with theoretical descriptions of second harmonic generation and with coherence theory.

This letter reports the first measurement of the second-order intensity-correlation function of cw second harmonic laser light. As a result of the rapid development of nonlinear devices, in particular harmonic generators, it is of interest to explore the statistical nature of the non-Gaussian optical fields associated with second harmonic generation in order to assess the influence of the statistics of the pump field and the nonlinear parameters of the medium. Some experiments have been discussed previously using as a pump source a pulsed solid-state laser[1,2] but reliable pulsed-laser measurements are difficult to perform and the results of any such measurements are not easily interpreted since pulsed high-power solid-state lasers usually lack spatial and temporal coherence in their output.

With the photon counting system shown in Fig. 1

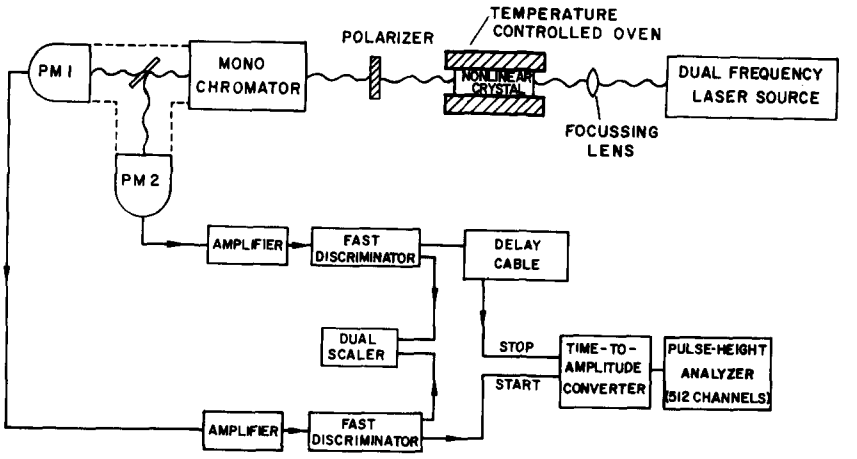

FIG. 1. Apparatus used to measure second-order intensity correlation function of optical field produced by second harmonic generation.

we have measured the normalized intensity fluctuation autocorrelation function $\lambda(\tau)$ for radiation produced by second harmonic generation (SHG) in lithium niobate ($LiNbO_3$) pumped with the focused beam of a continuous He-Ne laser operating in two independent axial modes. $\lambda(\tau)$ is given by $\langle : \Delta I(x, t)\, \Delta I(x, t+\tau) : \rangle / \langle : I(x) : \rangle^2$ where the colons denote a normally ordered product of operators and the angular brackets symbolize an ensemble average over all realizations of the field intensity. The procedure for the measurements of $\lambda(\tau)$ involves the use of a time-to-amplitude converter (TAC) and an associated computational procedure.[3] The TAC output pulses were stored in a 512-channel pulse-height analyzer (PHA). The rate $R(\tau)$ at which conversions that correspond to photons absorbed at the space-time points $\vec{x}$, t and $\vec{x}$, $t+\tau$ are stored is given by

$$R(\tau) = \alpha_1 C S_1 \alpha_2 C S_2 \Delta\tau \langle : \hat{I}(\vec{x}, t) \hat{I}(\vec{x}, t+\tau)$$
$$\times \exp\left[-\alpha_2 C S_2 \int_{t-T_L}^{t+\tau} I(\vec{x}, t')dt'\right] \exp\left[-\alpha_1 C S_1 \right.$$
$$\left. \times \int_{t-T_w}^{t} I(\vec{x}, t'')dt''\right] : \rangle \times \text{ dead time factor.} \quad (1)$$

α_1 and α_2 are the dimensionless quantum efficiencies of the photoelectors, S_1 and S_2 are the effective surface areas of the photodetectors, T_w is the full scale TAC conversion range, T_L is an arbitrary delay introduced to identify true coincidences, and $\Delta\tau$ is the width in seconds of each channel of the PHA.

If the photodetector average counting rates R_1, R_2, given by $R_{1,2} = \alpha_{1,2} C S_{1,2} \langle : \hat{I}(\vec{x}) : \rangle$, are kept sufficiently low that $R_1 T_w$ and $R_2 T_w \ll 1$, $R(\tau)$ reduces to

$$R(\tau) = R_1 R_2 \Delta\tau [1 + \lambda(\tau)]. \quad (2)$$

$R(\tau)$ is then constant and independent of τ for a field with no correlated intensity fluctuations.

The pump wavelength chosen for our measurements was the 1.1526-μ line of a He-Ne laser. This creates a harmonic radiation field at 0.5763 μ which is detected using photomultipliers with $S20$ cathode response. The two-mode output of a Spectra Physics Model 120 laser with about 1×10^{-3} W in the TEM_{∞} mode was focused into a stoichiometric $LiNbO_3$ crystal phase matched at a temperature of 176.6 °C. The second harmonic light ($5\sim10^{-6}$ W) emerging was polarized, filtered, and coupled to a 0.25-m monochromotor which serves as a selectable narrow band filter. The SHG signal is then split into two beams, each of which is detected by a cooled C31000F photomultiplier. The performance of the counting apparatus was verified by observing the TAC conversion rate $R(\tau)$ of an optical field produced by a 6328-Å He-Ne laser operating first in a single axial mode and then in a two-mode regime. The result of measurements of $\lambda(\tau)$ of second harmonic radiation are shown in Fig. 2. This figure displays the number of counts stored in each channel of the PHA as a function of photon arrival time difference. The observed cosine modulation frequency of the two-photon counting rate corresponds to the axial mode frequency separation of the He-Ne laser ($c/2L = 380.7$ MHz) as observed with a scanning Fabry-Perot interferometer or rf spectrum analyzer. All measurements were made with a TAC conversion range of 50 nsec and an average SHG photon counting rate of about 2×10^5 counts/sec.

The irregularities of the cosine modulation in Fig. 2(a) are not due to intensity fluctuation correlations but due to nonlinearities present in the electronics, in particular in the TAC. This is verified by first accumulating 20 000 TAC conversions per channel for SHG light produced from the two-mode laser and then subsequent accumulations of conversions in the PHA subtract mode produced by radiation from a single-mode laser. The dark current counting rate for the two photodetectors was sufficiently low ($< 10^3$ counts/sec) that it could

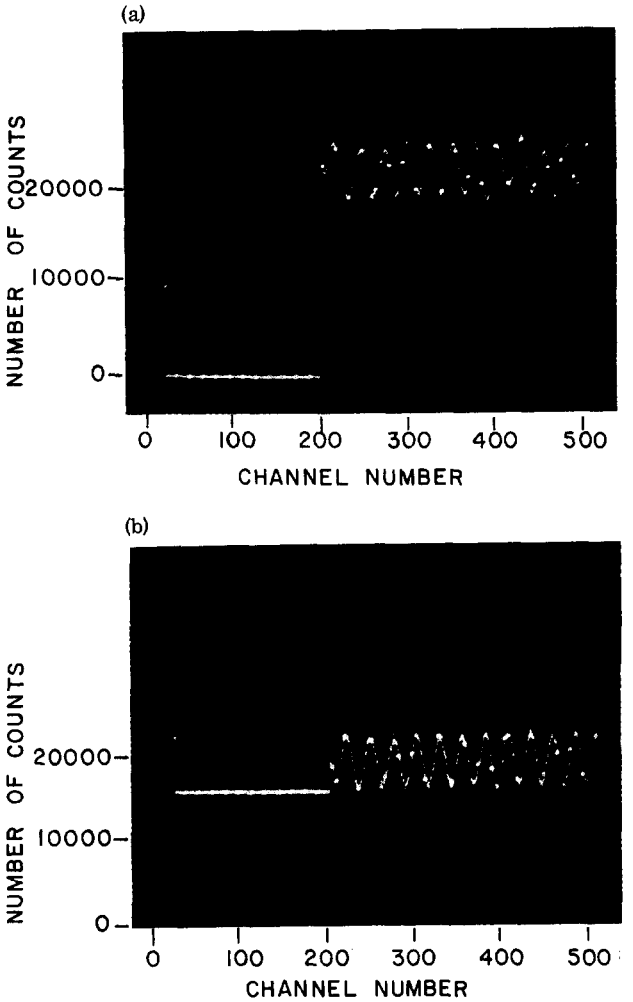

FIG. 2. (a) Number of TAC conversions as a function of channel number. Each channel is 100 ± 5 psec in width, with true coincidence ($\tau = 0$) corresponding to channel No. 206; (b) number of TAC conversions as a function of channel number, corrected for nonlinearities in the electronics that process the photomultiplier pulses.

be neglected. The normalized autocorrelation function $\lambda(\tau)$ can then be deduced directly from $R(\tau)$ and is given by $\lambda(\tau) = [R(\tau) - R_1R_2\Delta\tau]/R_1R_2\Delta\tau$.

The result of the measurement on the SHG radiation induced by a laser oscillating in two independent modes is given by

$$\lambda(\tau) = 0.13 \cos 2\pi \times 3.7 \times 10^8 \tau$$

corresponding to a cosinusoid of average period given by 27 channels $\times 100 \pm 5$ psec per channel.

Assuming perfect 90° phase matching for focused pump radiation, it can be shown[4] that the SHG radiation field intensity is given by $I_{SHG}(\vec{x}, t) = K I^2_{PUMP}(\vec{x}, t)$, where K is a nonlinear coupling parameter. Hence any fluctuations that may exist in the SHG output are determined by both the fluctuations of $I^2_{PUMP}(\vec{x}, t)$ and a term not correlated with $I^2_{PUMP}(\vec{x}, t)$ which takes into account any randomness that may be associated with K. For a two mode with an axial mode separation frequency $\Delta\omega$ and complete spatial coherence,

$$\langle : \hat{I}_{SHG}(\vec{x}, t)\hat{I}_{SHG}(\vec{x}, t+\tau) : \rangle / \langle : I_{SHG}(\vec{x}) : \rangle^2$$

$$= 1 + \tfrac{8}{9} \cos \Delta\omega\tau + \tfrac{1}{18} \cos 2\Delta\omega\tau .$$

Therefore, the theoretically expected behavior of $\lambda(\tau)$ is approximately given by $\frac{8}{9} \cos \Delta\omega\tau$ since the contribution of the $2\Delta\omega$ term to the modulation amounts to less than 2%.

The considerable difference between the observed maximum value of $\lambda(\tau)$ and the theoretically expected maximum value is due to the finite time resolution of the electronics and a decorrelation effect due to the use of focused beams in the production of the SHG radiation field. Measurements of the time slewing of the photon counting system yielded a value of 0.7 nsec which reduces the theoretical modulation amplitude from 89 to a 25% depth of modulation under the assumption of a Gaussian system function and its convolution with $R(\tau)$.[5] Theoretical analysis of the propagation of coherence functions in nonlinear crystals[6] indicates that the temporal dependence of the intensity correlation function of SHG radiation fields is deducible directly from the time dependence of the intensity correlation functions of the pump radiation field, but that the spatial coherence of the SHG field cannot be directly deduced from the properties of the pump field except in the case of a plane-wave pump field. Since the pump field in this experiment was neither completely spatially coherent nor a plane wave, the SHG field should be even less spatially coherent than the pump field. The spatial incoherence of the SHG incident on the photodetectors resulted in a further reduction of the modulation amplitude from 25 to 13%. The observed temporal dependence of the second-order intensity correlation function of the SHG field is in good agreement with that predicted from the temporal coherence properties of the pump field.

*This research was jointly sponsored by project THEMIS monitored by the U.S. Office of Naval Research and the National Aeronautics and Space Administration.

†Present address: Department of Electrical Engineering, Johns Hopkins University, Baltimore, Md.

[1]J. Ducuing and N. Bloembergen, Phys. Rev. 133, A1493 (1964).

[2]S.A. Akhmanov, A.I. Kovrigin, A.S. Chirkin, and O.N. Chenaev, Soviet Phys. JETP 23, 549 (1966).

[3]F. Davidson, Phys. Rev. 185, 446 (1969).

[4]G.D. Boyd and D.A. Klainman, J. Appl. Phys. 39,